Materials Physics and Mechanics 13 (2012) 37-47 Received: March 13, 2012

DIAMAGNETISM APPEARANCE OF ONION-LIKE CARBON SUSPENSION BY LASER RADIATION

K.G. Mikheev[1*], T.N. Mogileva[1], G.M. Mikheev[1], V.L. Kuznetsov[2], S.I. Moseenkov[2]

[1]Institute of Applied Mechanics, Ural Branch of the Russian Academy of Sciences, ul. T. Baramzinoi 34
426067, Izhevsk, Russia

[2]Institute of Catalysis, Siberian Branch of the Russian Academy of Sciences, prosp. Acad. Lavrent'eva 5
630090, Novosibirsk, Russia

*e-mail: k.mikheev@udman.ru

Abstract. The effect of nanosecond laser pulses (λ=1064 nm) on the optical properties of onion-like carbon (OLC) prepared by high-temperature vacuum annealing of detonation nanodiamond and dispersed in N,N-dimethylformamide (DMF) was studied. It is found that the interaction between laser pulses and OLC suspension resulted in the suspension bleaching in the interaction point. The bleached fraction of the suspension was pushed out from inhomogeneous magnetic field. The observed behavior could be explained by laser-stimulated chemical reactions between OLC and DMF, which led to the formation of a new substance with pronounced diamagnetic properties. Relying on the effect discovered, a model of magnetically controlled optical switch was proposed.

1. Introduction

Recently much attention has been given to the magnetic properties study of nanocarbon materials (see, e.g., review [1]). This interest is related to the development of methods for the synthesis of organic substances possessing magnetic hysteresis. It is well known that carbon materials are characterized by relatively high absolute value of diamagnetic susceptibility χ, which changes significantly in the transition of carbon from one to other allotropic form. It is also known that the magnetic properties of carbon materials, e.g. polymerized fullerenes, can be influenced by shaping or by radiation effect [1, 2]. At the same time the interaction of laser radiation with suspensions of various carbon nanoparticles is of interest for the development of effective laser power limiters intended to protect light sensors and human eyes from optical damage [3-7]. In contrast to fullerene solutions [8], aqueous suspensions of onion-like carbon (OLC), consisting primarily of nested closed fullerene-like shells, have a broad absorption band [9]. This makes such suspensions potentially attractive for the development of broadband optical limiters. In addition our experiments have shown the OLC suspensions in N,N-dimethylformamide (DMF) to be sufficiently stable. In this study we report the phenomenon of laser-induced diamagnetism appearance in suspension of OLC in DMF that can be used to create the magnetically operated light shutter.

2. Experimental

The basic elements of OLC are primary carbon particles representing self-contained high-defective fullerene-like shells embedded into each other. The samples were prepared by annealing the detonation nanodiamond particles in vacuum at 1800 K [10]. The particles were on average about 4.5 nm in size and formed 100 to 200 nm aggregates. Annealing leads to

nanodiamond graphitization and conversion to OLC. Bonding between the parent nanodiamond particles results in the formation of curved closed graphene shells which keep several carbon onions together to form agglomerates close in size to the parent nanodiamond particles.

In order to prepare the OLC suspension, the OLC powder was ultrasonically dispersed in N,N-dimethylformamide. The suspension with an OLC concentration of 1 mg/mL was found to be stable in time (with little precipitation over a period of nine months). According to the photon correlation spectroscopy data (Nicomp 380ZLS, Particle Sizing System Co.), OLC agglomerates on OLC/DMF suspension were on average about 170 nm in size.

Figure 1 shows transmission electron microscopic (TEM) images (JEOL JEM-4000EX, 0.18-nm resolution) of the OLC sample studied. TEM specimens were prepared by ultrasonic spraying of an OLC suspension onto a holey amorphous carbon film supported on a copper grid.

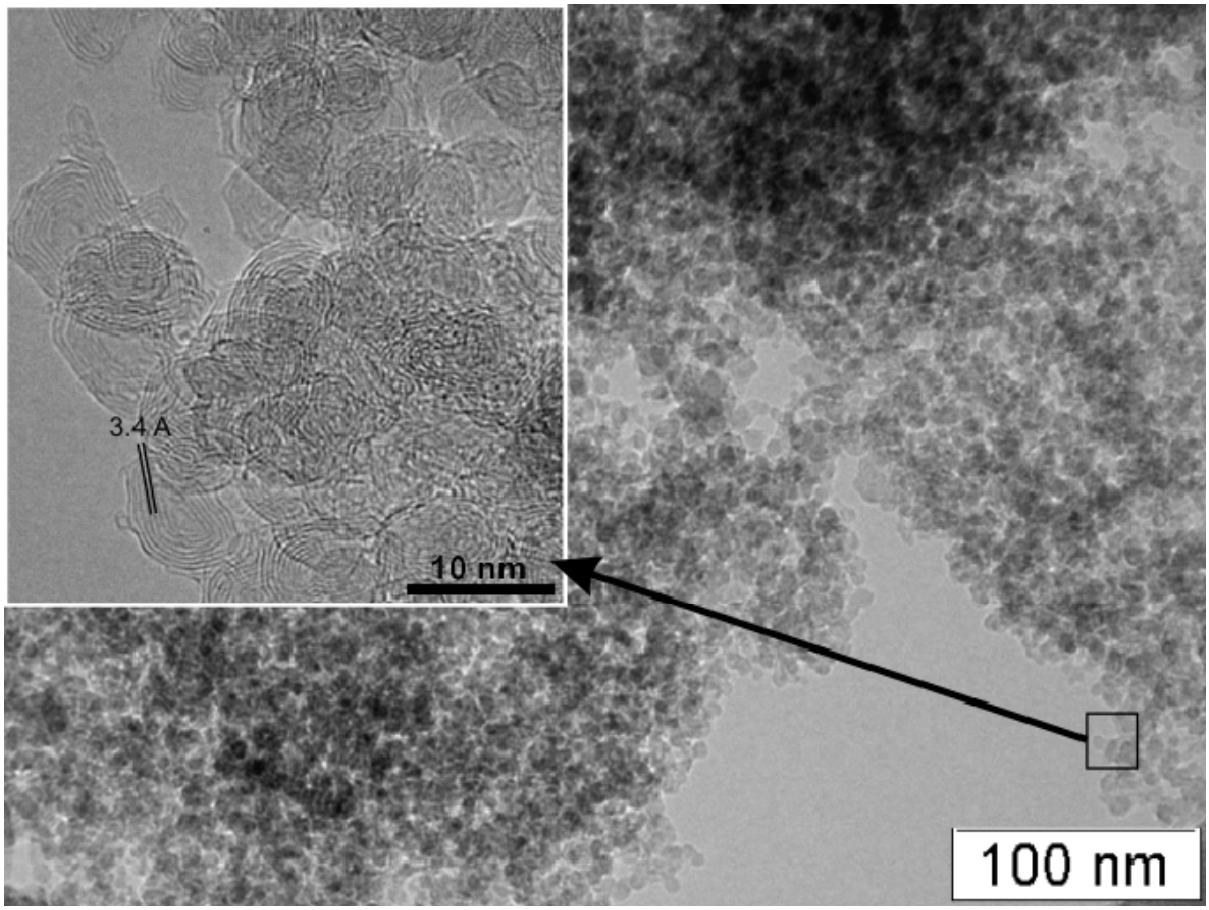

Fig. 1. TEM images of an OLC sample. The dark lines represent projections of graphene shells perpendicular to the image plane.

Initially, the purpose of our experiments was to study optical limiting of the suspension. To this end, we used standard open aperture z-scan measurements [11, 12] with 20-ns pulses at 1064 nm from a passively Q-switched single-mode Nd : YAG laser [13]. The suspension was held in a 1-mm-thick quartz cuvette, which was translated along the optical axis near the focus of a converging lens with a focal length of 100 mm. The laser pulse energies at the input (ε_{in}) and output (ε_{out}) of the measuring system (converging lens and optical cuvette) were measured with an automatic multichannel laser pulse detection system [14]. In this way,

the transmittance of the cuvette containing the suspension, $\tau = \varepsilon_{out}/\varepsilon_{in}$, was determined as a function of the

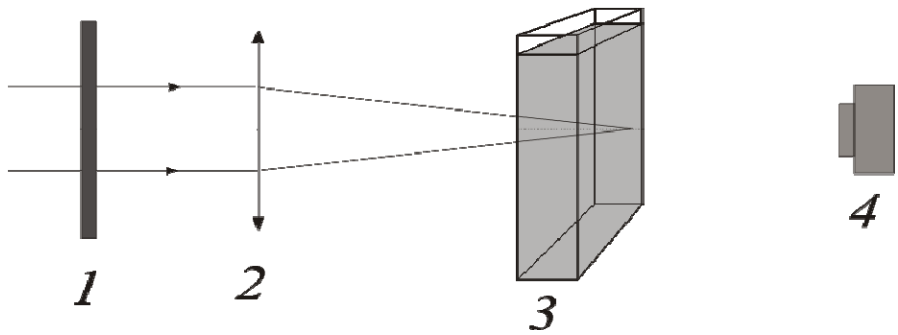

Fig. 2. Optical scheme of the experiment: (1) - shutter; (2) - focusing lens; (3) - optical cell with OLC/DMF suspension; (4) - photo camera.

The optical scheme of this experiment is presented in Fig. 2. Laser beam passed through opened shutter (1) was focused by lens (2) on an optical cavity filled with the studied suspension (3). At closed shutter, the region of interaction between laser radiation and suspension was photographed by photocamera (4).

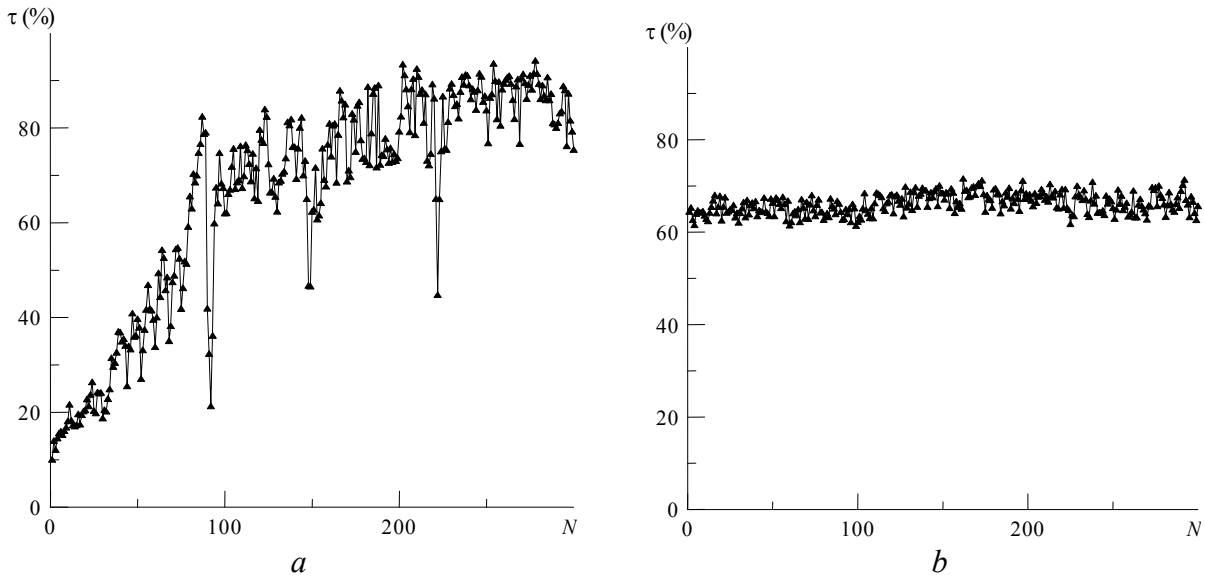

Fig. 3. Transmittance τ of an OLC suspension in DMF as a function of laser shots number at z = 0 (*a*) and 23 mm (*b*) at a fixed laser pulse energy ε_{in} = 0.5 mJ (1 mm thick cuvette).

Experimental τ(z) curves were expected to have minimum near the beam waist at any values of ε_{in} because of optical limiting. However in our experiments the optical bleaching was observed: after a certain number of laser shots, $N=N_{cr}$, the irradiated zone became essentially transparent, as illustrated by the curve in Fig. 3a. According to our experimental data, N_{cr} depends on the laser pulse energy at the cuvette input (ε_{in}) and distance z. As an example, Fig. 3 shows the τ(N) curves obtained at the same energy ε_{in}=0.5 mJ and two values of z. Away from the beam waist, at z = 23 mm (Fig. 3b), the transmittance of the suspension is

~65% and is unaffected by multiple laser pulses. At the same time, when the cuvette containing the suspension is placed at z = 0, the first laser pulses experience optical limiting, with more than 80% of their energy lost (Fig. 3a). With increasing N, the transmittance τ rises, and for N>80 optical limiting gives way to bleaching, the irradiated zone of the suspension becomes essentially transparent. Thus, laser irradiation of a zone in the cuvette containing the suspension leads to an almost complete bleaching of the suspension. Of special note are 'dips' in τ, which give way to a rise in τ after several shots.

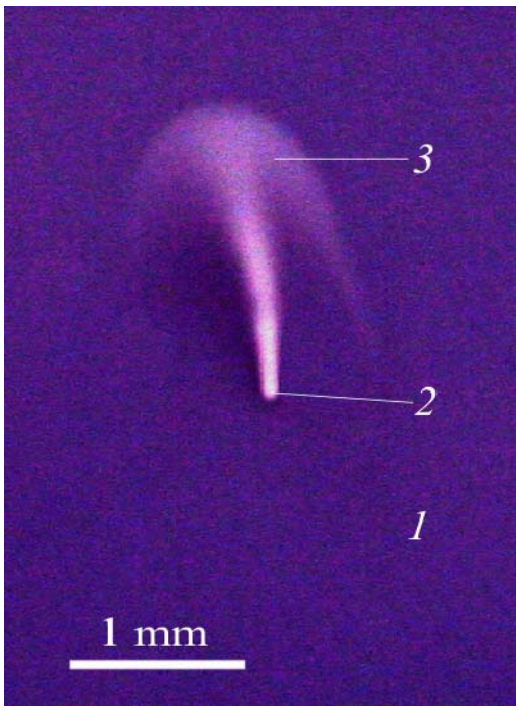

Fig. 4. Image of a bleached zone: (1) suspension, (2) zone under irradiation (a focused laser beam was normal to the image plane), (3) bleached suspension upwards by virtue of thermal convection.

Figure 4 is an image of a bleached zone produced by 900 shots. The photograph was taken using a Canon EOS 20D camera with a macro lens (EF-S 60 mm f/2.8 Macro USM). Thus, the experiments have shown the OLC/DMF suspension to irreversibly bleach forming a new stable liquid fraction under the laser radiation power density above 300 MW/cm^2.

To check this liquid fraction for the magnetic properties, the cuvette with the studied suspension was placed in the inhomogeneous magnetic field of a permanent magnet. Experiments were performed with samarium-cobalt permanent magnets in the form of cylinders (with dimensions ø10 x 3 mm^2 and ø18 x 7 mm^2) and rectangular parallelepipeds (9 x 13 x 28 mm^3). The maximum magnetic induction of these magnets in air did not exceed 250 mT. The scheme of this experiment was the same as described above in Fig. 2 with the difference being the magnet situated near the cuvette with the OLC/DMF suspension.

3. Experimental results

In the absence of the magnetic field the bleached fraction of suspension goes up (evidently due to the thermal convection) at a very low velocity to an insignificant height (about 2 mm), and gradually transforms to the shape of a mushroom, as can be seen in Fig. 4. The further increase in the number of laser pulses does not lead to significant change in the shape of bleached fraction and only produces some blurring in the mushroom cap, whereby the cap

predominantly spreads downward (it might be the evidence of a greater density if the laser-modified fraction).

It is of interest to understand the mechanism of optical bleaching. To this end, we examined the effect of multiple laser shots on the absorption spectrum of the suspension [15]. The suspension was placed in an optical cuvette and exposed to a focused laser beam for several days with constant stirring. The absorption spectra were measured with a PerkinElmer LAMBDA 650 double-beam UV/Vis spectrophotometer. As a reference cuvette, we used a 2.09-mm-thick quartz cuvette filled with DMF. The sample cuvettes had the same thickness.

Figure 5 shows the absorption spectra of the suspension before [spectrum (1)] and after [spectrum (2)] the laser irradiation. It is worth mentioning that the strong absorption band of DMF lies at λ<260 nm. A noteworthy feature of the data in Fig. 5 is that the spectra intersect at a few points, the most significant of which is the intersection point at λ_0= 414 nm: spectrum (1) lies above spectrum (2) for $\lambda > \lambda_0$ and below it for $\lambda < \lambda_0$. This means that laser irradiation increases the transmittance of the OLC suspension in DMF in the near-IR to visible range. At the same time, irradiation increases the absorption in the suspension in the blue-violet and UV spectral regions. Thus, focused laser radiation leads to bleaching of the suspension in the visible and near-IR spectral regions, in accordance with the above results (Figs. 3a, 4). Another important feature is that the spectra in Fig. 5 are very close in peak height but differ in peak position by 2 nm (Fig. 5, inset). In addition, laser irradiation markedly shifts the absorption band of the suspension in the range 245-252 nm to shorter wavelengths and broadens it.

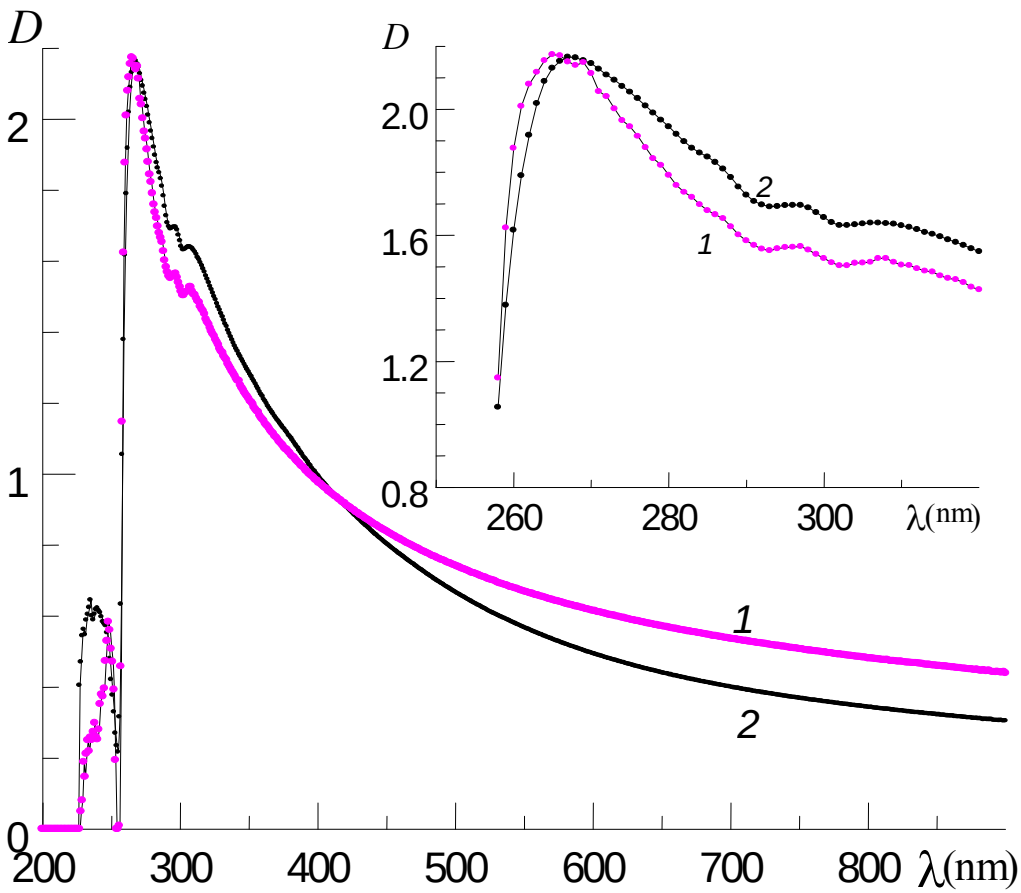

Fig. 5. Absorption spectra D of an OLC suspension in DMF.
(1) before and (2) after laser irradiation (2.09-mm-thick quartz cuvette).

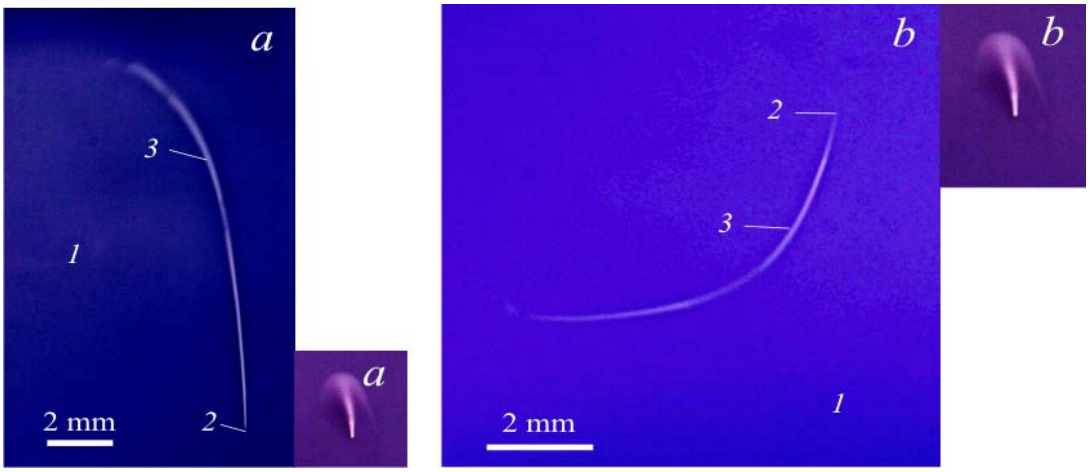

Fig. 6. Spatial shapes of the bleached fraction of an OLC/DMF suspension in the plane normal to the laser beam (a′), (b′) in the absence of a magnetic field and (a), (b) in the field inducing the motion of the bleached fraction (a) - upward; (b) – downward. The scales of spatial shapes (a′) and (b′) are the same to the (a) and

The results have shown that the formation of bleached fraction in the inhomogeneous magnetic field of permanent magnet situated near the laser beam waist differs from the process observed in the absence of magnetic field. Depending on the position of the magnet relative to the point of laser action on the suspension, the bleached fraction can either go up at a quite high velocity and rotate in the counterclockwise direction (Fig. 6a) or fall down and rotate in the clockwise direction (Fig. 6b).

4. Discussion

The magnetic properties of the irreversibly bleached fraction are revealed by its motion in the field of a permanent magnet. The density of ponderomotive forces acting on a unit volume a magnetic material is expressed by the following formula (in SI units) [16]:

$$f = \frac{\chi}{2\mu(\chi+1)} grad(B^2), \tag{1}$$

where χ is the magnetic susceptibility, μ_0 is the magnetic constant, and B is the magnetic induction. Formula (1) indicates that diamagnetic substances with $\chi<0$ are pushed out from the magnetic field and, hence, the direction of force f acting on the substance is opposite to the direction of a vector determined by the gradient of square induction (B^2).

The magnetic field of a permanent magnet is inhomogeneous. The distribution of ponderomotive forces acting on a diamagnetic substance in the vicinity of such a magnet can be most readily calculated for the magnet in the form of a short cylinder of radius r. In this case, the calculation reduces to determining the magnetic field of a linear circular current passing in a ring of radius r [17]. Let us introduce a rectangular coordinate system with the xz plane perpendicular to the plane of the ring (R = 1) and the Z axis passes through the ring center (x = 0, z = 0). Then, assuming the magnetic induction at this point to be unity, one can calculate the ponderomotive forces that act on the diamagnetic substance at various points (x, z) [18].

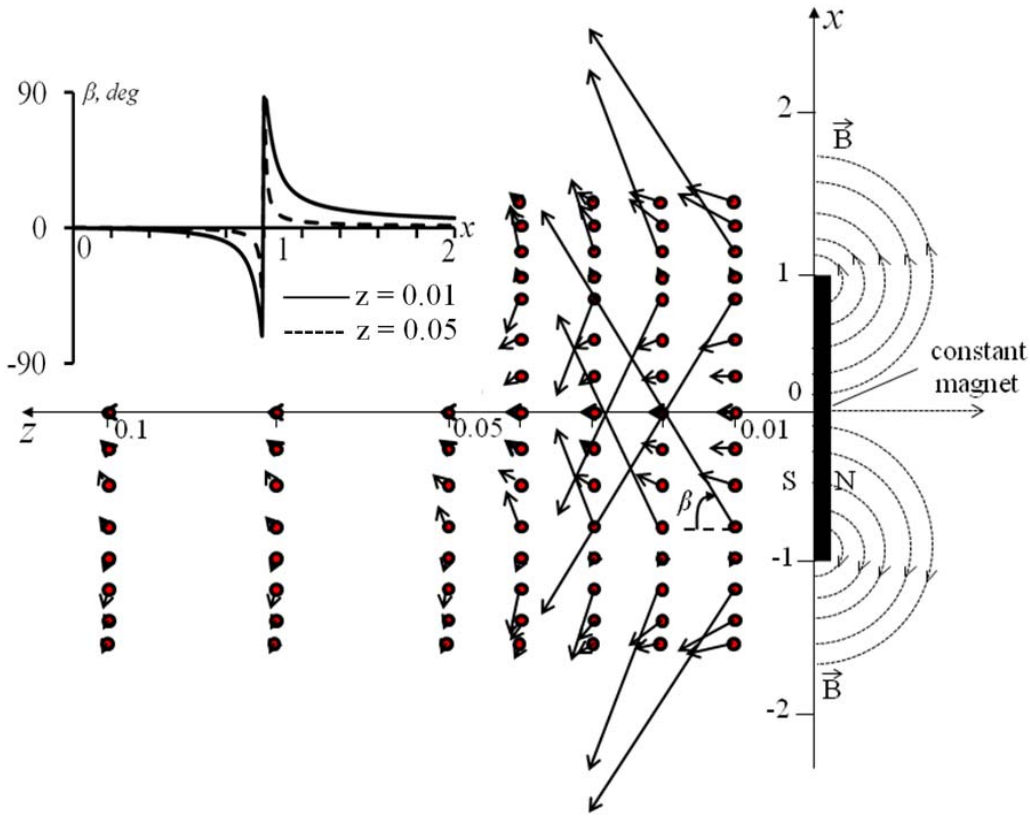

Fig. 7. Distribution of ponderomotive forces acting on an OLC/DMF suspension in the field of a cylindrical permanent magnet in the plane passing through the cylinder axis (xz is the plane of the Cartesian coordinate system with the z axis coinciding with the cylinder axis). Lengths of force vectors are expressed in relative units; magnetic field lines are conditionally depicted by dotted half-circles. The inset shows a plot of angle β versus coordinate x.

The distribution of these forces can be represented by vectors as depicted in Fig. 7, where the direction of each vector is determined by angle β that is measured clockwise from axis z. As can be seen, the distribution of ponderomotive forces is mirror-symmetric relative to the z axis. However, the vector of force f that acts on a diamagnetic particle is a complicated function of coordinates. Figure 7 shows that, for any fixed x, the absolute value of f sharply reduces with increasing z. For all values of z, the increase in x at $x>1$ is accompanied by a decrease in angle β from 90° to 0°, while a decrease in x at $x<-1$ leads to an increase in angle β from -90° to 0°. In the interval of $-1<x<1$, the variation of β is non-monotonic. From this it can be concluded that, if a diamagnetic particle, formed under the laser action at the initial moment of time, has a coordinate of $x>1$, then its motion in an inhomogeneous magnetic field will proceed in the direction of increasing x (i.e., upward) with rotation in the counterclockwise direction. In the case of $x<-1$, the particle motion in this magnetic field will proceed in the direction of decreasing x (i.e., downward) with rotation in the clockwise direction [19]. The behavior of bleached fraction in our experiments is consistent with the qualitative analysis of the motion of a diamagnetic particle in the field of a permanent magnet.

Thus, the bleached fraction of OLC suspension laser-irradiated in an inhomogeneous magnetic field exhibits pronounced diamagnetic properties and is pushed out from the zone of laser beam action. As a result, a “fresh” portion of suspension is supplied to this zone. Depending on the arrangement of a magnet relative to the zone of laser beam waist, the

supplied suspension is bleached and pushed out from this zone either upward (Fig. 6a), or downward (Fig. 6b), or with deviation from vertical axis (Fig. 8a), or along a spiral (Fig. 8b).

The results of our measurements showed that the velocity of bleached fraction reached 6 x 10^{-2} mm/s that was about 30 times greater than the maximum velocity in the absence of magnetic field. Therefore, the inhomogeneous constant magnetic field features a kind of convection that leads to increasing efficiency of the laser-induced bleaching.

The experiments were also performed in a homogeneous magnetic field. In this case, the bleached fraction also took the shape of a mushroom similar to that formed in the absence of magnetic field (Fig. 4). In contrast, in the experiments with permanent magnets, it was possible to create an inhomogeneous constant field such that the irreversibly bleached fraction formed under laser irradiation for a long time (>30 min) formed a helical shape (Fig. 8b).

In addition, it should be noted that DMF does not possess pronounced diamagnetic properties and is characterized by $\chi = -7.2 \times 10^{-6}$ (for the comparison, the diamagnetic susceptibility of water at room temperature is $\chi = -9 \times 10^{-6}$). Unfortunately, in our experiments, the susceptibility of OLC/DMF suspension could not be determined before and after laser treatment. Nevertheless, it was found that, although OLC particles introduced into the cell with pure DMF also interact with the inhomogeneous constant field, but this interaction is much weaker than that of observed for the laser-bleached fraction of OLC/DMF suspension.

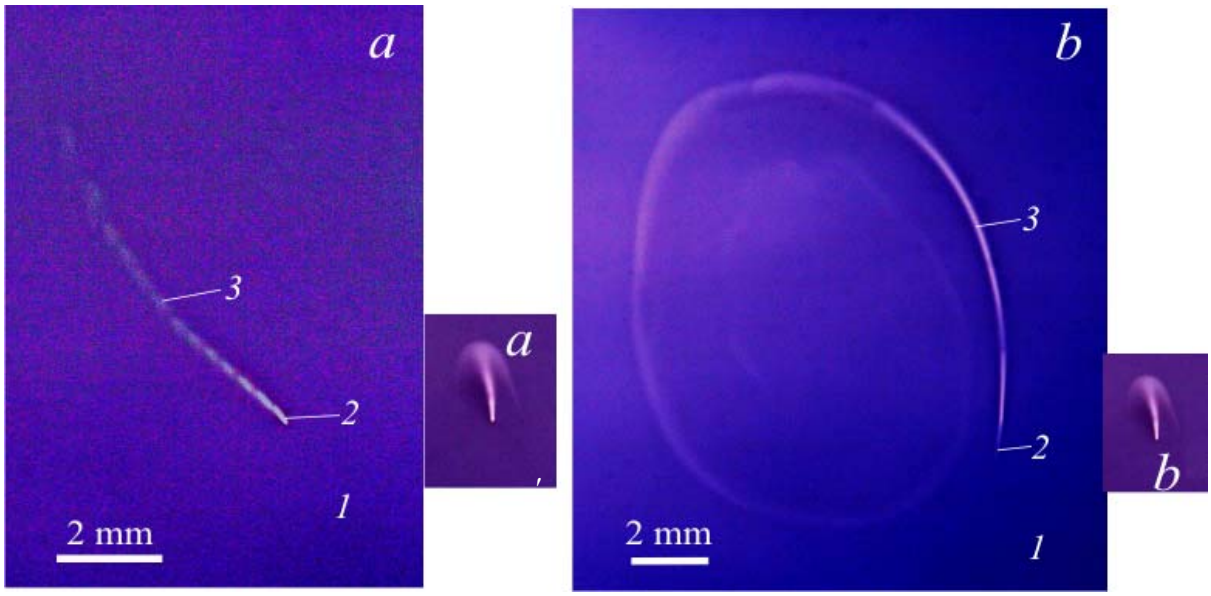

Fig. 8. Spatial shapes of the bleached fraction of an OLC/DMF suspension in the plane normal to the laser beam (a′), (b′) in the absence of a magnetic field and (a), (b) in the field inducing the motion of the bleached fraction (a) – with deviation from vertical direction; (b) – along a spiral. The scales of spatial shapes (a′) and (b′) are the same to the (a) and (b), respectively.

The entire set of experimental data obtained shows the evidence that the zone of laser action can feature photochemical reactions between OLC and DMF, which lead to the formation of a new substance with pronounced diamagnetic properties. Extending the results of Siedschlag et al. [20], obtained for a photochemical reaction between fullerene C_{60} and DMF, to our system, we may conclude that the interaction between OLC and DMF could lead to the formation of H-OLC-R compounds, where H is hydrogen and R is a radical such

as $CH_2(CH_3)NHCO$ that is formed upon the removal of hydrogen from DMF molecule. In other words, the laser irradiation of OLC particles produces their heating and induces a chemical reaction with DMF as an H-donor solvent. This reaction results in the hydrogenation of graphene shells with the formation of non-conducting fragments resembling condensed aromatic compounds. Evidently, this must lead to an increase in the absolute value of the diamagnetic susceptibility of the bleached fraction, since it is known that the ratio of the diamagnetic susceptibilities of diamond, graphite, and paraffin is 1:6:15.

5. Application

The motion of the bleached fraction is controlled by the permanent magnet situation relative to the optical cavity with OLC suspension. It enables to create a magnetically controlled optical switch for protection of eyes, optical systems, and sensors from powerful laser radiation. We suggest a model of such device which consists of optical cuvette filled with the suspension of onion-like carbon nanoparticles and two converging lens situated astride the optical cuvette. The model is also supplied with source of inhomogeneous magnetic field which lies in such a way that there is provision for extrusion from the zone of influence of the light flux with suspension of the illuminated part of the suspension, arising from the said effect. The principle of operation of this devise is the following. The powerful directed light flux (4) (see Fig. 9) is focused on the point (5) of cuvette (1) by the collecting lens (2).

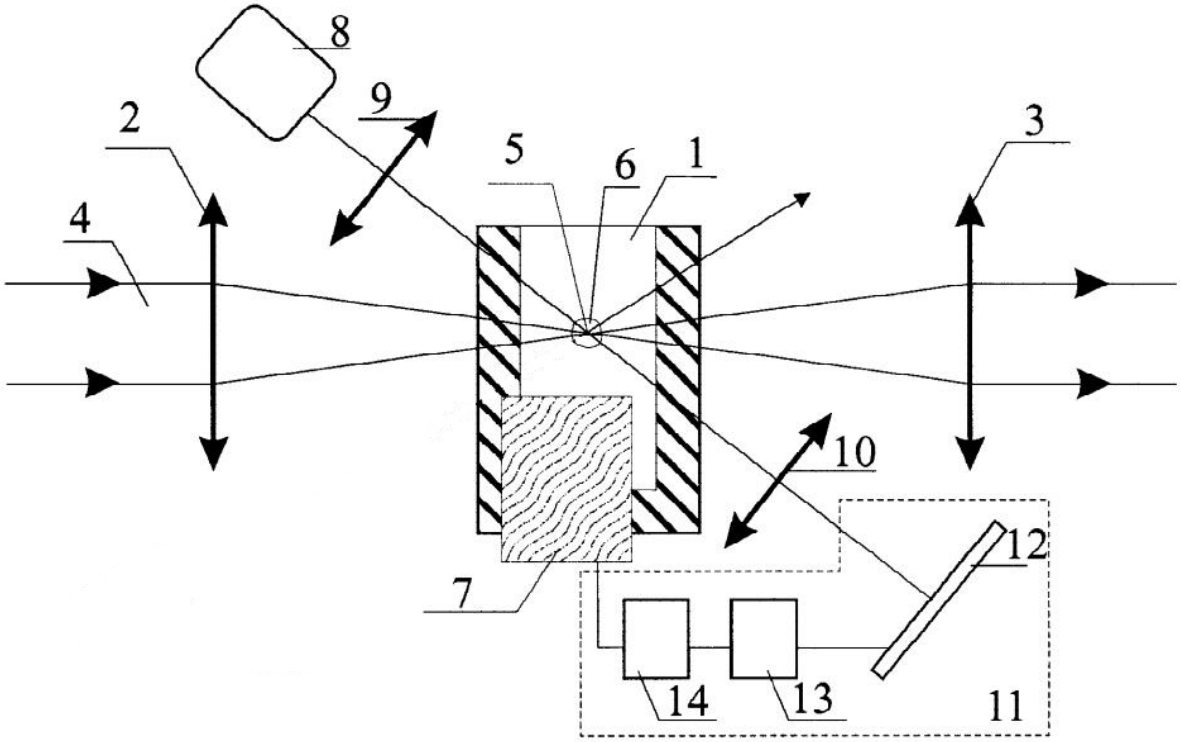

Fig. 9. Scheme of the model of an optical shutter: (1) – optical cuvette filled with the suspension of onion-like carbon nanoparticles in the DMF; (2), (3) – collecting lenses; (4) – directed light flux; (5) – focusing point of the directed light flux; (6) – bleached fraction of the suspension; (7) – source of inhomogeneous magnetic field; (8) – source of continuous directed optical irradiation; (9), (10) – additional collecting lenses; (11) – electrical control device consisting of: (12) – fast photodetector, (13) – regulated electrical delay line, (14) – current pulse forming assembly.

The cuvette (1) is filled with the suspension of onion-like carbon nanoparticles in the dimethylformamide. At the same time the irradiation of the source of continuous directed irradiation (8) by the instrumentality of additional collecting lens (9) is directed to the focusing point (5) of the collecting lens (2). Then it is collimated by additional collecting lens (10) and received by fast-acting photodetector (12). The interaction between powerful directed light flux (4) with the suspension results in the decreasing of irradiation power in the cuvette output due to the effect of optical limiting. When the irradiation power density is high enough to bleach the suspension in the irradiation focusing point the transmittance of cuvette increases from τ_1 to τ_2 (time t_1, Fig. 10). The suspension bleaching can be registered by fast-acting photodetector (12), since this photodetector receives the radiation from the source of continuous directed optical irradiation (8) passing through the focusing point (5).

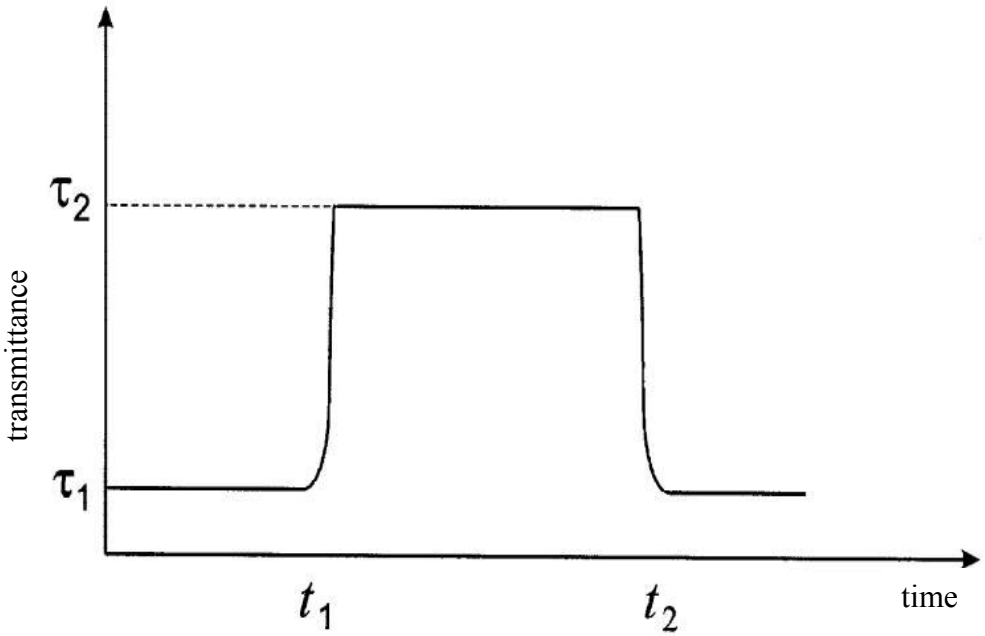

Fig. 10. Transmittance diagram of light flux at the output of optical cuvette (after lens (3) on time.

Thus, the source of continuous directed optical irradiation (8) and fast-acting photodetector are the suspension bleaching control system. Such bleached fraction of the suspension remains at the current position for a long time and moves at a very low velocity, due to the diffusion processes and thermal convection only. The source of inhomogeneous magnetic field representing electromagnet with electrical control device (11) is used to change the position of the bleached fraction. It can be turned on immediately or after a certain period of time ($\Delta t=t_2-t_1$, Fig. 10), which is defined by the regulated electrical delay line (13). In the issue the inhomogeneous magnetic field "pushes out" the bleached fraction of the suspension from focusing point (5). Thus, the transmittance of the optical cuvette filled with the suspension sharply reduces to τ_1 (Fig. 10), therefore, in the cuvette (1) output (after collecting lens (3)) the light impulse with preset duration $\Delta t=t_2-t_1$ is forming.

Then, the process described after the next moment of suspension bleaching under the powerful directed light flux (4) is repeated. Thus, one can make the optical shutter, working in the "multivibrator" regime.

6. Conclusions

To conclude, the exposure of an OLC/DMF suspension to high-power pulsed laser radiation results in the chemical reactions between components of the suspension that leads to the formation of a bleached fraction containing a substance with pronounced diamagnetic properties. The motion of the bleached fraction is controlled by the permanent magnet situation relative to the optical cavity filled with OLC suspension. The effect discovered can be used for magnetically controlled optical switch designing.

References

[1] T.L. Makarova // *Semiconductors* **38** (2004) 615.
[2] V.A. Davydov // *Phys. Usp.* **45** (2002) 1175.
[3] X. Sun, Y.N. Xiong, P. Chen, J.Y. Lin, W. Ji, J.H. Lim, S.S. Yang, D.J. Hagan, E.W. Van Stryland // *Appl. Opt.* **39** (2000) 1998.
[4] L. Vivien, D. Riehl, P. Lancon, F. Hache, E. Anglaret // *Opt. Lett.* **26** (2001) 223.
[5] I.M. Belousova, N.G. Mironova, A.G. Scobelev, M.S. Yur'ev // *Opt. Commun.* **235** (2004) 445.
[6] M.V. Gryaznova, V.V. Danilov, O.V. Khapova, A I Khrebtov, T A Shakhverdov // *Quantum Electron.* **34** (2004) 207.
[7] G.M. Mikheev, D.L. Bulatov, T.N. Mogileva, A.V. Okotrub, E.V. Shlyakhova, O.G. Abrosimov // *Tech. Phys. Lett*. **33** (2007) 248.
[8] K. Dou, E.T. Knobbe // *J. Nonlinear Opt. Phys. Mater.* **9** (2000) 269.
[9] E. Koudomas, O. Kokkinaki, M. Konstantaki, S. Couris, P. Detkov, S. Korovin, V. Kuznetchov, S. Pimenov, V. Pustovoi // *Chem. Phys. Lett.* **357** (2002) 336.
[10] V.L. Kuznetsov, I.Yu. Malkov, A.L. Chuvilin, T.M. Moroz, V.N. Kolomiichuk, Sh.K. Shaichutdinov, Yu.V. Butenko // *Carbon* **32** (1994) 873.
[11] S.B. Korovin, A.N. Orlov, A.M. Prokhorov,V.I. Pustovoi, M. Konstantaki, S. Couris, E. Koudoumas // *Quantum. Electron.* **31** (2001) 817.
[12] D.L. Bulatov, G.M. Mikheev, T.N. Mogileva, A.V. Okotrub, E.V. Lyakhova, O.G. Abrosimov // *Nanotekhnika* **3** (11) (2007) 24.
[13] G.M. Mikheev, D.I. Maleev, T.N. Mogileva // *Quantum. Electron.* **22** (1992) 37.
[14] G.M. Mikheev, T.N. Mogileva, A.Yu. Popov, D.G. Kalyuzhnyi // *Instr. and Experiment. Tech.* **2** (2003) 101.
[15] G.M. Mikheev, V.L. Kuznetsov, D.L. Bulatov, T.N. Mogileva, S.I. Moseenkov, A.V. Ishchenko // *Quantum Electron*. **39** (2009) 342.
[16] I.E. Tamm, *The Principles of Electricity Theory* (Nauka, Moscow, 1966).
[17] A.B. Al'tman, A.N. Gerberg, P.A. Gladyshev et al., *Permanent Magnets. Handbook*, ed. by Yu.M. Pyatin (Energiya, Moscow, 1980).
[18] K.G. Mikheev // *Khim. Fiz. Mezoskop.* **12** (2010) 578.
[19] G.M. Mikheev, V.L. Kuznetsov, K.G. Mikheev, T.N. Mogileva, S.I. Moseenkov // *Tech. Phys. Lett*. **37** (2011) 831.
[20] C. Siedschlag, H. Luftmann, C. Wolff, J. Mattay // *Tetrahedron*. **55** (1999) 7805.