Methods of improving the tribological properties of plasma-sprayed insulating oxide coatings applied to the details blanket of ITER

Andrey N. Zayatzev Alexei V. Morozov Yuliya P. Aleksandrova
odin221@yandex.ru, morozovalexei@mail.ru

Abstract

An ever increasing demand for reliability thermonuclear experimental reactors (TFTR, ITER, NET etc.) has made very high insulating and mechanical requirements for thermally sprayed oxide coatings (Al_2O_3, $MgAl_2O_4$). There is a possibility of shift oxide coatings owing to high shear stress. It is necessary to improve the tribological properties of electro-insulating oxide coatings (EIC) on account of high friction coefficient for pairs "Al_2O_3 - metal", "$MgAl_2O_4$ - metal". The article reviews various ways concerning improvement tribological properties of EIC. The friction properties and wear resistance plasma-sprayed EIC (Al_2O_3) has been investigated through pin-on-disk dry sliding tests. Using carbonitrided niobium (VN-3) plates between EIC and mating part allows to reduce friction coefficient up to 0,08 at room temperate by increase wear resistance. The test at evaluated temperature (250°C) in air have been displayed loss antifriction and wear resistance properties Al_2O_3 in pair carbonitrided niobium by sliding distance more 2 meters.

Introduction

One of the task of development thermonuclear experimental reactor (TER) is the creation of the electro-insulation coatings (EIC) working at high operating temperatures, intensive fluence radiation as well as cycle mechanical and thermal loads leading to wear and microcracks in the coating and consequently it is able current flowing. EIC undergo significant static (up to 450 MPa) and dynamic (up to 200 MPa) loads that will inevitably lead to high shear stress depending on the coefficient of friction pair "EIC - metal" by working TER [1, 2, 3]. Chance of separation, detachment EIC from substrate will depend both on the physical-mechanical properties of the EIC and frictional processes. Therefore along with insulating properties the EIC should have a high tribological characteristics and special attention should be given to the value of the coefficient of friction with mating part.

Nowadays the main materials used in TER as EIC is aluminum oxide (Al_2O_3) and aluminium magnesium oxide (spinel - $MgAl_2O_4$) [3]. Among various thermal spray methods, like HVOF, detonation and flame spraying etc., plasma spraying is still the most widespread production technique for ceramic coatings, like Al_2O_3, Cr_2O_3, ZrO_2 and another refractory metals [4]. Plasma spraying technique is used in wide application for its extremely high temperature plasma generation which is essential for dealing with coating materials exhibiting high melting points. Although HVOF process is technologically advanced but its major disadvantage relates to pollution coating unburned fuel combustion products that reduce the insulation properties and are forbidden because of radiation and vacuum purity. It is also concerned another thermal spray methods which used combustible fuel

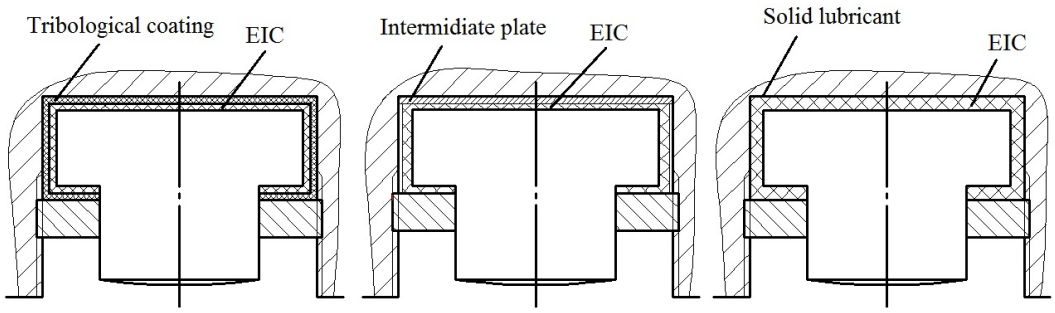

Figure 1: Ways to improve the tribological properties of plasma-sprayed oxide coatings. a – Spraying tribological coating on top EIC; b – Using solid lubricants; c – Set intermediate plate.

(kerosene, acetylene, etc.) for melting the powder materials. However, HVOF technique owing to its low flame temperature is more suitable for spraying $WC - Co$, $Mo - Mo_2C$, $Cr_3C_2 - Mo$, $WTi - C$ and etc. [5].

The main materials counterbodies EIC in blanket of ITER are stainless steel and aluminum bronze. In many articles concerned tribological properties plasma-sprayed aluminum oxide coatings said about their high friction coefficient ($\mu = 0,52 - 0,98$) by sliding against different steels, bronze, refractory metals and in some cases low linear wear resistance ($I_h = 10^{-5} - 10^{-7}$) [6]. Anyway Al_2O_3 possess very high hardness due to their ceramic nature and can stand high temperatures. Thus, actual task is to develop methods and ways to protect EIC from shear stress and wear for ensuring their high reliability over full lifetime of TER.

On example one of the parts blanket of ITER (radial contact pad) there are various ways for protecting EIC from the tangential forces and wear Fig. 1. In first way (Fig. 1a) it is offered to spray tribological coating on top EIC by thermal spray methods ($Al_2O_3 - 13TiO_2$, Cr_2O_3, $Cr_3C_2 - NiCr$ etc.). Another way it is to use the solid lubricants (MoS_2, $MoSe_2$, WS, WSe_2 etc.) between a pair of friction (Fig. 1b). Using of pure graphite doesn't desirable due to loss lubricating ability in vacuum, dry gases even dry air at temperatures above 300°C and may as well reduce insulation properties [7]. Working temperature blanket of ITER will change from 25 to 250°C (25000-30000 cycles). In the third way an intermediate plate is set between EIC and response part so that friction pair is changed in order to reduce friction coefficient and wear (Fig. 1c).

The main focus of this article is to evaluate a possibility of improving tribologocal properties EIC (Al_2O_3) though setting the intermediate Nb plates which was carbonitrided in glow-discharge plasma (ion carbonitriding). As it is known nitride coating at niobium and its alloys have a high wear resistance [8]. Therefore, the aim of this study is to provide an experimental assessment of friction coefficients, wear rates, wear mechanisms of plasma-sprayed insulation coatings against carbonitrided Nb under different dry sliding wear conditions through pin-on-disk testing (ASTM G99) in particular by room and elevated temperatures.

1 Materials and equipments

The plasma-sprayed ceramic insulation coatings Al_2O_3 (powder: Starck Amperit 740.001, -45+22 μm) with bond coat to improve adhesion $NiCr$ (powder: Starck Amperit 250.002, -90+45 μm) have been manufactured onto steel 37Cr4 pin (diameter = 6 mm, height = 5

mm). Impurity of aluminium oxide powder is about 0,25 % by mass. The substrates were grit-blasted with 1 mm corundum at air pressure up to 4kg/cm^2 in a blasting chamber. Plasma-sprayed coatings were manufactured on plasma spray equipment YPY-8M with plasma torch M8-27 (capacity: 10-15 kW), operated in Air Plasma Spraying (APS). All pins with oxide coating were grinded cross-section on special polished machine by using SiC papers. Carbonitriding process onto niobium alloy VN-3 (4,85Mo-1, 49Zr-0, 10C-0, 003N2-0, 005H2, % by mass) plates (40 mm × 20 mm × 2 mm) in glow-discharge plasma was conducted by specially designed semi-industrial equipment that allowed to develop temperature up to 1500°C, prepare gas mixtures and change operating pressure range from $13{\cdot}10^{-2}$ to $13{\cdot}10^{3}$ Pa. Working temperature was changed from 1000 to 1100°C, the plasma gas was nitrogen with some quantity carbide-forming gas. The spraying parameters for plasma-sprayed oxides are listed in Table 1.

Table 1. Plasma spraying operating parameters

Parameters	$NiCr$	Al_2O_3
Current(A)×Voltage(V) = Power(kW)	280×50=14	320×50=16
Feed powder, g/min	4,8	16,2
Velocity of travel plasma torch, cm/min	1600	1100
Plasma gases flow rates, l/min	Ar:20-25;N_2:1,5-2,0	Ar:25-30;N_2:2,0-2,4
Transporting gases flow rates, l/min	2,0-2,5	2,5-3,0
Cooling gas, kg/cm^2	Air 2-3	

Topology, wear tracks of the plasma sprayed coatings and the carbonitrided plates were determined by transmission electron microscope TECHNAI G2 20 TWIN after tribological tests. Roughness measurement was performed by profilometer Mitutoyo SJ-210, determining the Ra parameter (ISO 4287-1). Vickers microhardness (based from ASTM E2546) and elastic modules were determined on Al_2O_3 coatings, niobium alloys from the unloading part of instrumented indentation loading-unloading curves by the Oliver-Pharr formula. Curves were got by Nanovea Mechanical Tester (micro/macro) at the following conditions: 5 N indentation load, 4 N/min loading rate, 8 N/min unloading, 15 s loading time. Microhardness niobium alloys was also got by means of measuring the indentation diagonals. A minimum 5 indentations were performed for each microhardness and elastic modules measurement Qualitative analysis (elemental) of the modified surface layers plates from niobium alloy was measured by using optical emission spectrometer glow GD Profiler-2 (Horiba Jobin Yvon).

Pin-on-disk dry sliding tests (ASTM G99) were performed with tribometer Nanovea TRB-HL using pins with plasma spray coating (Al_2O_3) on carbonitrited plates (niobium alloy VN-3) Fig. 2. Pins is fixed into a steady spherical pin holder against the sample surface, plates are set onto a rotation disk (Fig. 2). Five different parameters sets have employed, varying the normal load. The temperate was changed from 25 to 250°C. The parameters of the various tests (labeled tests 1-5) are listed in Table 2. Sliding distance have been chosen with regard to maximum friction distance EIC parts in blanket of ITER.

Table 2. Pin-on-disk testing conditions

Parameters	Test 1	Test 2	Test 3	Test 4	Test 5
Sliding speed, m/s			$1{\cdot}10^{-5}$		
Sliding distance, m			2		
Normal load, N	100	200	300	400	500
Radius wear track, mm			4		
Temperature,°C			25 — 250		

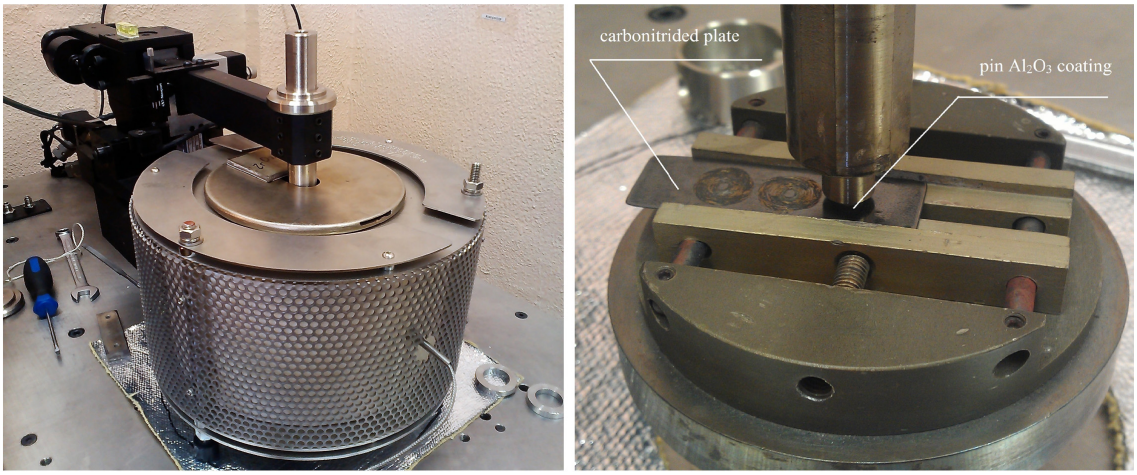

Figure 2: Tribometer Nanovea TRB-HL: Left — tribometer with a working furnace; Right — pin and plate are fixed onto tribometer.

For each tests, friction coefficient was measured on-line by the instrument; wear rate (I_h) of the samples and pin was determined by measuring wear mass and calculating the wear volume/linear wear. A minimum of 5 repeated tests were performed for each testing conditions.

2 Results

The microhardness, elastic modules and roughness parameters of the testing coating, niobium alloy before and after carbonitriding are listed in Table 3.

Table 3. Vickers microhardness, elastic modules, Ra for all tested materials

Materials	$HV_0.5$	HV,GPa	$HV_{\varnothing\ of\ ind.}$	E,GPa	Ra,μm
Al_2O_3	848 ± 64	9,1 ± 0,1	—	122 ± 8	0,90 ± 0,25
Nb alloy (VN-3)	182 ± 8	1,9 ± 0,1	195 ± 4	101 ± 5	0,50 ± 0,02
Carbonitrited Nb alloy (VN-3)	318 ± 5	3,4 ± 0,1	362 ± 7	115 ± 4	0,53 ± 0,01

It should be noticed that Nb plates before and after carbonitriting haven't got different roughness. As regards microhardness they displace increasing hardness after ion carbonitriding about 2 times compare with an initial state. Increase of microhardness after the modification is probably due to the formation of niobium carbide (NbC, Nb_2C) and nitride carbide (NbN, bN_2) but nevertheless it should be made phases X-ray diffraction (XRD) analysis modification layers of plates for confirmation this idea. Al_2O_3 coating is more hard than carbonitrided niobium plates because an intrinsic hardness of the material (bulk alumina 20-23 GPa [4]). The maximum elastic modules is about E = 122 ± 8 GPa (Al_2O_3 coatings). On another hand this value at non carbonitrided and carbonitrided Nb alloy doesn't much more less and remains the same order of magnitude. The highest elastic modules difference being about 20 % between oxide coating and carbonitrided niobium alloy. Pin-on-disk results for plasma-sprayed coatings (Al_2O_3) are shown in Fig. 3.

Material build-up on the coatings surfaces is recorded in all test at room temperature 25°C due to carbonitrided niobium debris transfer from plate to pin while the plate undergoes significant material loss. But it should be noted that hard asperities Al_2O_3

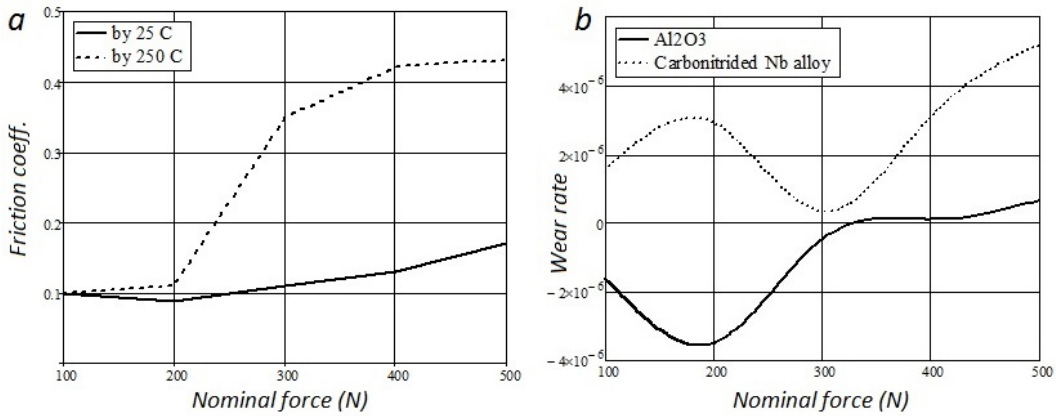

Figure 3: Friction coefficients and wear rates coating Al_2O_3 against carbonitrided niobium alloy VN-3 at room (25°C) and elevated (250°C) temperature from normal force. a - friction coefficients at room and elevated temperature; b - plate and pin (oxide coating) wear rates at room temperature.

embedded in carbonitrided layers of alloy VN-3 and we can say not only about fatigue wear induced brittle fracture by also micro abrasion wear. The hard particles of coating grooved (ploughing and cutting) surface carbonitrided niobium (Fig. 4). The occurrence of negative value of the wear rate is confirmed by via SEM micrographs of wear scars plasma-sprayed coatings (Fig. 4b). The defects such as microcraks didn't favour an increase wear resistance. Therefore, the internal stress in the coating plays very important meaning as well as fracture toughness.

At low speed (V = $1{\cdot}10^{-5}$ m/s) the dry sliding wear mechanism of oxide coating was mainly crack propagation induced detachment the most brittle and weakly bound splats. Alumina also undergone brittle fracture and some deformed wear debris carbonitrided niobium adhered to its surfaces. Wear rates Al_2O_3 can be characterized as mild wear for test 1-3 and severe for test 4-5. Al_2O_3 exhibits an excellent sliding wear resistance and antifriction properties against carbonitrided alloy VN-3 compare at room temperature with similar results against refractory, stainless steels and aluminium bronze [6]. The effect of low friction coefficient reached probably due to dividing the friction surfaces of solid film material. Material build-up on coating surface consists mainly of carbon and probably its compounds (Fig. 5). Therefore it may be assumed that carbon is the form graphite worked as a solid lubricant and due to its layered structure gets a low friction coefficient (0,09-0,17) at room temperature. Subsequently it is also cause very low wear volume and in tests 1-3 this parameter is negative value. The presence of free carbon may be due to the complexity generation compounds with niobium by carbonitrided as self-diffusion begins at temperature 1370-1670°C. For example self-diffusion nitrogen stats at temperature 630-930°C. At high temperature (250°C) and high load (300-400 N) this effect disappears which can be associated with the oxidation of carbon. On the other hand the process oxidation of graphite begins at temperatures above 450 °C. Results of wear rates at elevated temperature aren't shown due to very low repeatability values.

The obtained results make it possible to talk about the perspective of applying carbonitrided niobium intermediate plates in pair with EIC (Al_2O_3) while further research is needed in order to achieve low friction coefficient and high wear resistance at elevated temperatures.

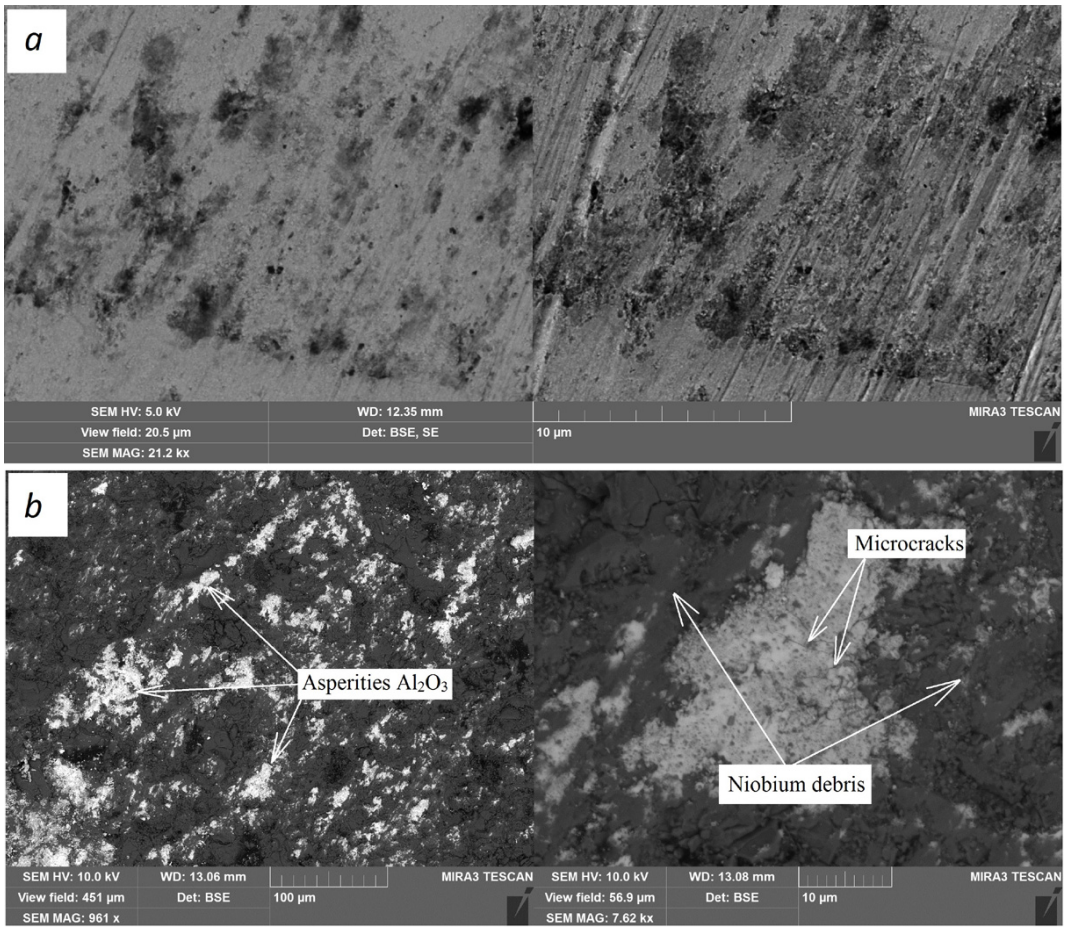

Figure 4: SEM micrographs of wear scars on plasma-sprayed coating: a — $VN-3$, and b — Al_2O_3.

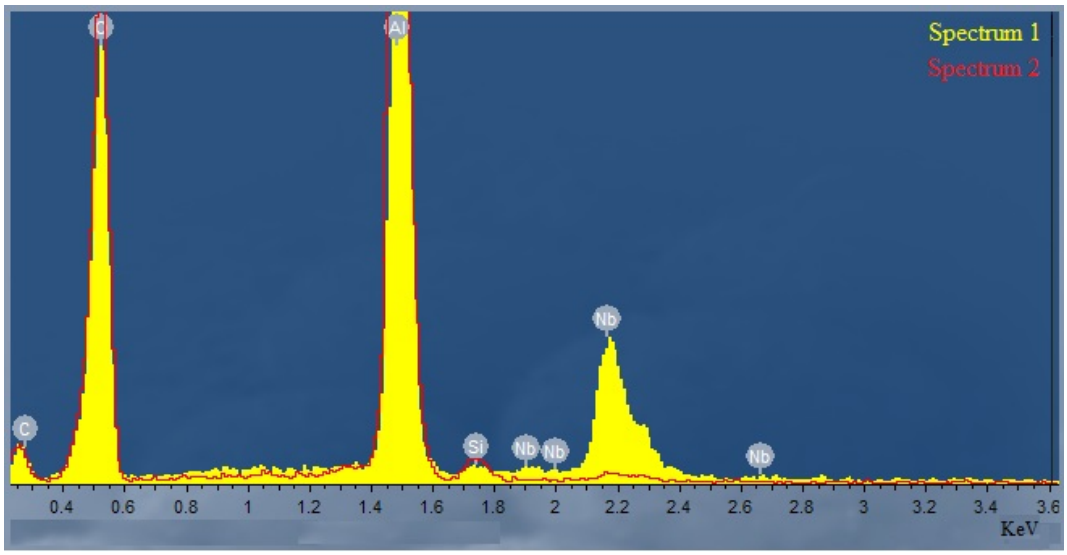

Figure 5: Qualitative analysis of surface coating Al_2O_3 after tribological tests by room temperature.

Acknowledgements

The authors are deeply grateful to professor L.I., Kuksenova.

References

[1] M. Sabado. TFTR materials issues and problems during design and construction // Journal of Nucl. Materials.- May. 1984.- Vol. 123.- Iss. 1-3.- P. 1087-1098.

[2] A. Rene Raffray, Mario Merola Overview of the design and R and D of the ITER blanket system // Fusion Eng. and Design.- Aug. 2012.- Vol. 87.- Iss. 5-6.- P. 769-776.

[3] Material Assesment report 3.6 "Electrical-Insulation Ceramic Coating". ITER D 22eYPW v.2.0., 2004.

[4] G. Bolelli, V. Cannillo, L. Lusvarghi, T. Manfredini Wear behaviour of thermally sprayed ceramic oxide coatings // Wear.- 2006.- Vol. 261.- P.1298-1315.

[5] J.R. Davis, Handbook of Thermal Spray Technology, ASM International, Materials Park (2004).- P. 3.

[6] P.W. Trester, T.E. Mckelvey, D.W. Doll, D.L. Sevier Selection and qualification of materials for relative motion and electrical isolation in a vacuum environment // Thin Solid Films.- 1984.- Vol. 119.- P.113-120.

[7] Voronkov B.D. Dry friction bearings / Voronkov B.D.. - 2 izd.pererab.i ext.- L.: Mashinostroenie, 1979.-P. 224.

[8] Y.D. Kogan, U.M. Lahtin, D.P. Shashkov. // Metallography and thermal processing of metals.- 1968.- N 9.- P.20

Andrey N. Zayatzev, 4 Maly Kharitonyevsky Pereulok, Moscow, Russia
Alexei V. Morozov, prosp. Vernadskogo 101-1, Moscow, Russia
Yuliya P. Aleksandrova, 4 Maly Kharitonyevsky Pereulok, Moscow, Russia